Automation of Heat Supply For The Refining of Petrol

Nurgizat Y.S., YarmukhamedovaZ.M., Myrzabek A.D.
(Kazakh National Research Technical University named after K.I. Satpayev
Almaty, Republic Kazakhstan,

ABSTRACT : *The article demonstrates the modernization petrolreprocessingheatsupply section. For automation equipment described research object to the selected object based process flowsheet. There is constructed the structural scheme automation heatsupply section.*

KEY WORDS *-ennoblement, gasoline, catalyst, hydro treating, production, automation, petrol, heat, fraction.*

I. INTRODUCTION

Abroad and in our country is continuously growing volume of high-octane gasoline production, which causes the necessity of improved processes for preparing them, and brings additional challenges to the development and using of additives for fuel.

Motor gasolines are produced by refining crude oil, gas condensate, natural gas, coal, peat and oil shale, as well as the synthesis of carbon monoxide and hydrogen [1].

II. DESCRIPTION OF THE SYSTEM

The raw material plant is wide gasoline fraction obtained by primary distillation of crude oil, held stabilization. Physical and chemical property characteristic of a gasoline fraction are shown in table 1.

Products of the installation are the following gasoline fractions:

1) z.q. - 62 ° C - is used as an essential component of gasoline, which provides its starting properties; it consists of pentanes and isohexane, also contains some amount of butane and hexane;

2)62 - 85 ° C - the raw material for getting benzole on platforming plants;

3)85 - 105 ° C - raw material for getting toluene on platforming plants;

4) 105 - 140 ° C - raw materials for getting xylene on platforming plants;

5) 140 - 180 ° C - is used as a component of aviation kerosene or as a raw material for catalytic reforming units increasing the octane number [2].

Table 1 - Physico-chemical properties of gasoline fractions of petroleum

Temperature selection	Output to oil	ρ_4^{20}	The sulfur content, %		Acidity mg KOH per 100 mL
			Total	mercaptan	
z.q.-180 °C	20,6	0,6976	0,29	0,205	1,24

Table 2 shows the group consisting of a hydrocarbon oil fraction boiling up to 180 ° C.

Table 2 - Group hydrocarbon composition of oil fractions boiling up to 180°C

Temperature selection, °C	Output to oil, %	ρ_4^{20}	n_D^{20}	The sulfur hydrocarbon, %		
				aromatic	naphthenic	Paraffin
Н.к. – 6	1,9	0,6733	1,3820	0	27,0	73,0
62 – 95	3,4	0,7220	1,4090	3	54,0	43,0
95 – 122	3,5	0,7480	1,4180	5	50,0	45,0
122 – 150	4,1	0,7700	1,4280	9	47,0	44,0
150 – 180	7,7	0,7950	1,4430	16	44,0	40,0

III. CONTROL BY USING SIEMENS CONTROLLER

Gasoline fraction is used for getting various grades of motor fuel. It is a mixture of various hydrocarbons, including straight-chain and branched alkanes. Features burning unbranched alkanes are not ideally suited to internal combustion engines. Therefore, often a gasoline fraction is subjected to thermal reforming to convert linear to branched molecules. Before use, usually mix this fraction with branched alkanes, cycloalkanes and aromatic compounds obtained from other fractions by catalytic cracking or reforming [3].

ATPCS of heating sectionsconstructed by a principle of a distributed system. They have a large quantity of control channels, regulation and control,

signaling and measurement. The technical bases are the Simatic 1200 controllers from Siemens Company, performing the following functions:

- Collecting data (32 analog signals, 90 digital signals);
- Filtration data;
- Digitization;
- Entering in the database;
- Regulation and control;
- Changing the settings;
- Lock;
- Signaling and control.

The subsystems in a distributed system are functionally connected and their work is subject to a common goal and processors have in addition to the hardware connection of programming sharing program, which is carried out by means of communication channels [4].

Temperature sensors and level sensors are connected to the controller with a three-wire scheme in the hating section (figure 1):

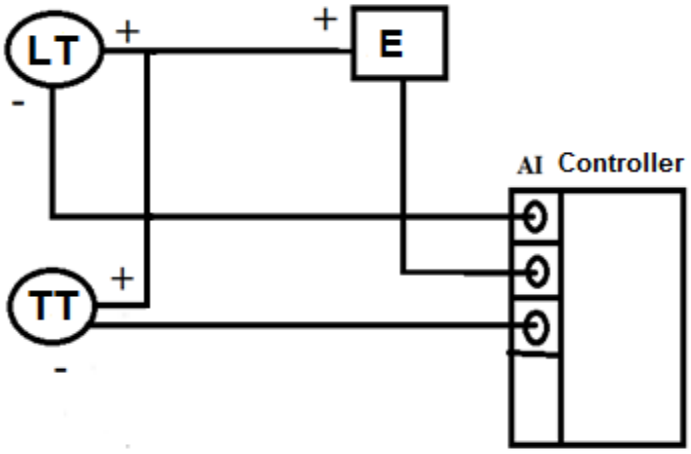

Figure 1- The scheme of connection temperature sensors and pressure

Sensors of flow and pressure are connected bythe four-wire scheme which is showing follow (figure 2):

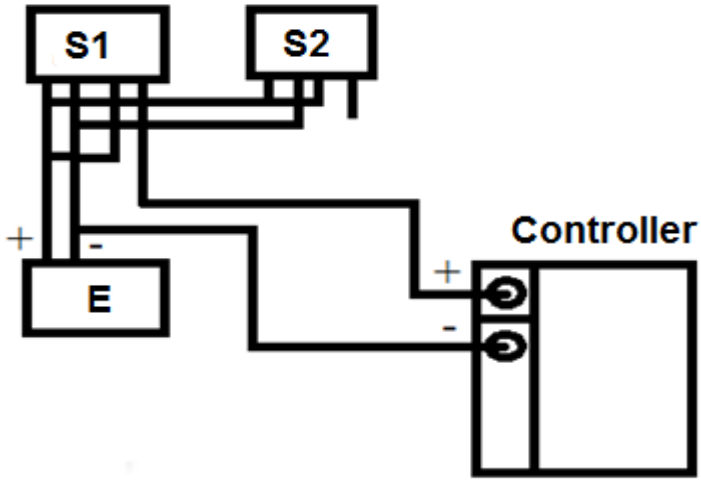

Figure2- The scheme of connection pressure sensors and flow sensors

Subsystem of measurement should withstand the following technical specification requirements. Accuracy of measurement of each sensor does not exceed 0.5%. The accuracy of the signals by the position of the actuators is not standardized. The delay from the time the information display the operator panel before its appearance should not exceed 1 second. The survey sensors are occurs cyclic program controller according to the operating system and does not exceed 1 second.

An alarm system provides a clear signal, contribute to the prevention of accidents and incidents.The scheme of signaling should capable of simultaneously supplying light and sound signals, socketsound signals, repetitive operating executive sound signaling equipment after pressing the button

of turning off; Signaling in project by using pulse signaling circuit.

An example of the signaling sections of heating: direct water temperature became higher than the permissible value, the contact closes, the signal goes to the signaling scheme, which is assembled on the blocks. From this scheme goes signals that go to the signaling device - light (flashing light) and a speaker (sound). Once the operator has noticed the problem, click "read" signal is removed, the lamp stays lit, the sound is muted. After returning to the parameter in the regulatory framework of the lamp goes out. The circuit returns to its original position.

The scheme of signaling activation on figure 3.

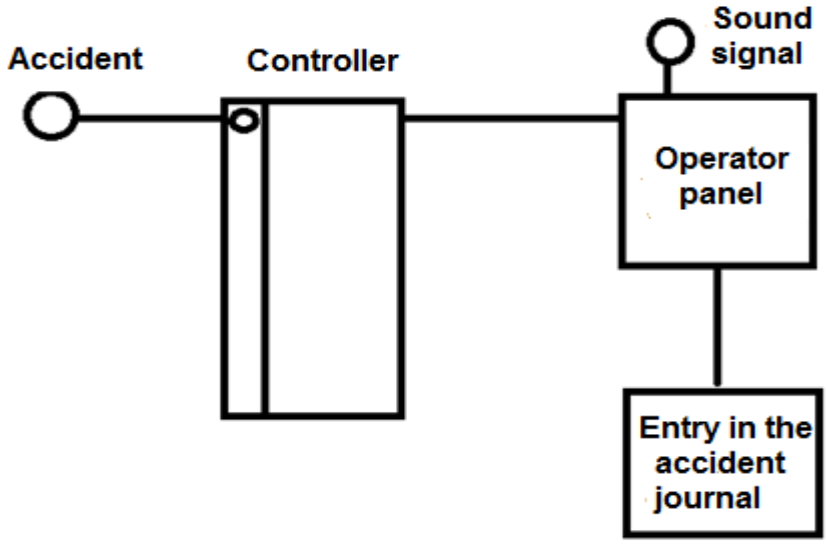

Figure 3–Structural scheme of activation signaling

Automatic control system of boiler installations provides changing plant capacity while maintaining the preset parameters (pressure and temperature of the steam).Furthermore, it increases safety, reliability and efficiency of the boiler, reducing the number of staff and facilitates the conditions of his labor. When adjusting the boiler power is provided by the correspondence between the water flow to the boiler, and the steam produced that is characterized by the constancy of the water level in the drum.

Management Subsystem in the controller performs the functions termination of the fuel supply (shut-off valves are closed) at the following events:

- Increasing or decreasing the gas pressure to the burner;
- Reducing the underpressure in the boiler furnace;
- Air pressure is lowered in front of the burner;
- Extinction of the flame of the burner;
- Increasing the pressure in the drum;
- Raising or lowering the water level in the boiler drum;
- Fault protection circuits, including power loss.

Example Adjustment Scheme in the heating sections (figure 4):

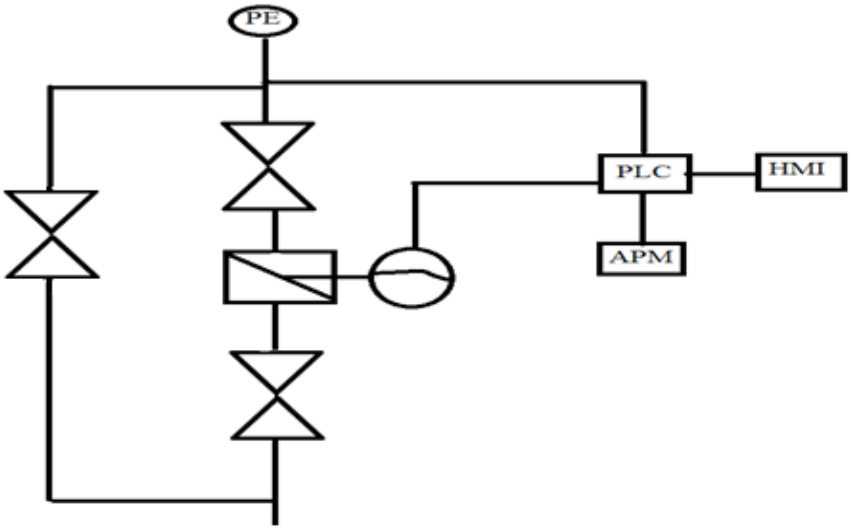

Figure 4- Scheme of control valves

The operator can do the following actions in the heating section according to the technical task:

-Disable the automatic control mode, and transfer to Distance mode;
- Display information about the control loop and the position of the executive body of the display;
- Control of the regulatory body position (position indicator);
- The ability to change the set parameters.
Below in figure 5 shows process flowsheet of gasoline upgrading heating section.

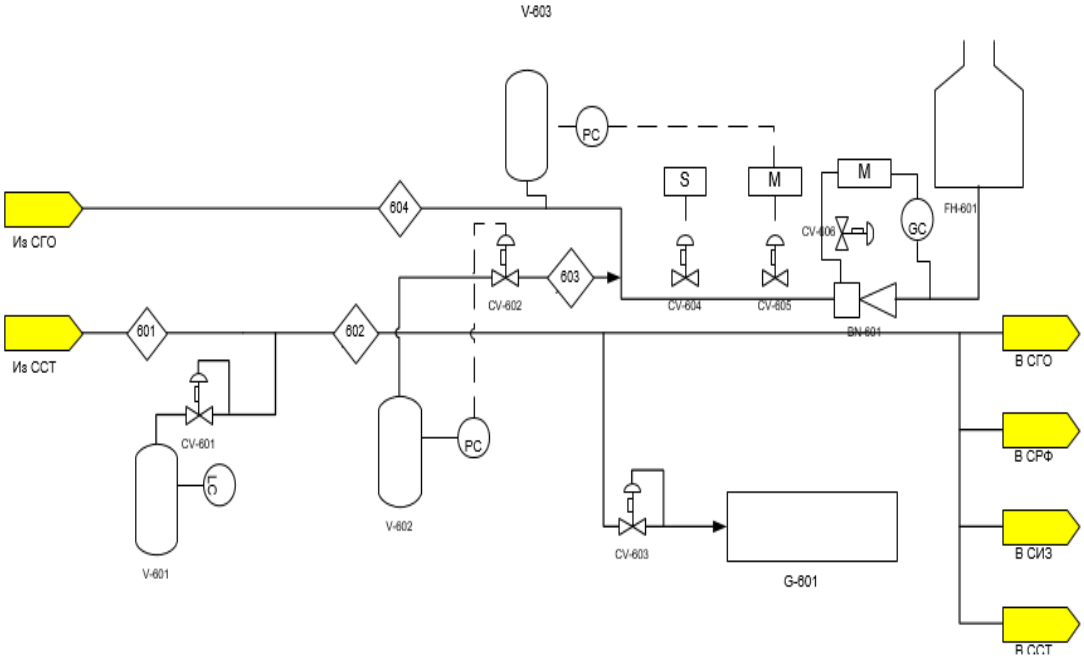

Figure 5 - Technological scheme of heat supply section

V-601 – a tank for storing, reception and delivery of liquefied hydrocarbon gas;
CV-601 – valve of reserve gas;
V-602 – buffering capacity, align pulsating flow and weakening gas shocks; they are connected to a gas pipeline directly from the suction and discharge pipes of the compressor;
BN-603 – burner;
FH-601 – furnace gases afterburning;
G-601 – electric generator.

As it is well known Siemens controllers used for complex manufacturing processes. In the case of ennoblement gasoline, Siemens controllers provide advantages require such as:

- Flexible configuration of each operator position;
- The operator's station is equipped with a touch keyboard allows direct access to any process window by pressing the function keys;
- Communication with the subsystems of the upper and lower levels;
- Virtual testing function that allows you to debug application software, without having to connect a controller and with the connection.

Below is shown an overall block diagram of automation of petrol reprocessing.

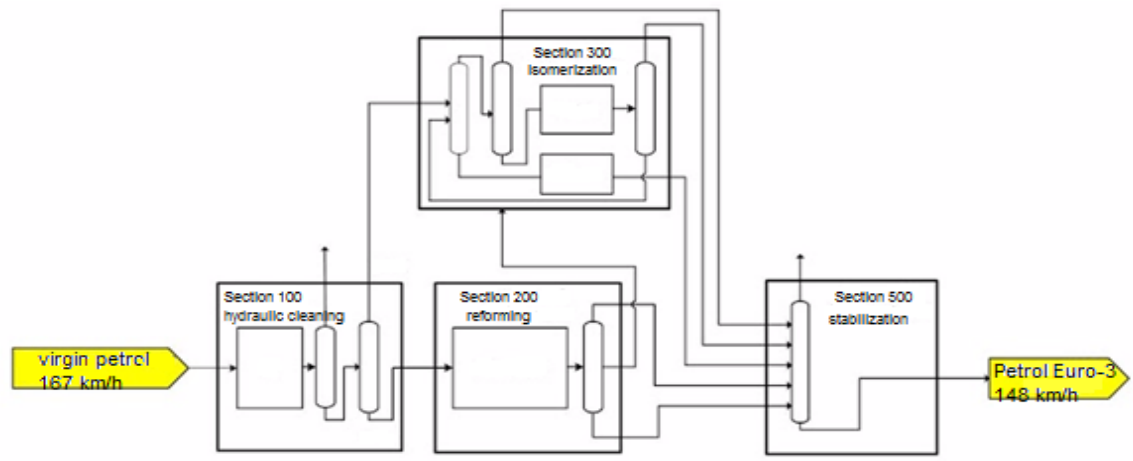

Figure 6- The overall structural scheme of automation of petrol reprocessing

IV. RESULTS

The result is a cost-effective technological scheme of refining gasoline heating section. The use of automation for this heating section provides the reliability of the system, since the entire process occurs without human intervention.

V. CONCLUSION

At present days in Kazakhstan increased demand for higher-quality grades of gasoline, i.e. the Euro-3 and above standard. Since, in our country poorly developed area in the processing of crude oil, they have to buy in the neighborcountries. So, it will be cost-effective to develop and implement a computerized system of refining and petrol reprocessing.

Improving the reliability of the ATPCS is lead to a significant increase in process safety, occupational relief apparatchiks, maintenance workers and workers for the care and supervision of the equipment.

Therefore, modernization is lead to increasing quality of the completed product.

REFERENCES

[1] Solodova N.L., Terentieva N.A., “Hydrostatics of fuels”, Kazan, KAZAN PUBLISHING HOUSE, 2008. (in Russian).

[2] Ahmetov S.A., “Technology of deep processing of oil and gas”, Textbook for Universities, Ufa, Gilem PUBLISHING HOUSE, pgs. 672, 2002. (in Russian).

[3] Manovyan A. K., The technology of primary processing of oil and natural gas: A manual for schools. 2nd ed. - M .: Chemistry, 2001. - 568 p .: silt.(in Russian).

[4] Magaril R. Z., Theoretical foundations of the chemical processes of oil refining: a tutorial. - M .: SAM, 2008. - 280 p.(in Russian).